Data Sheet

Article number: 29560214305230
Description: Shaft mounted gear
A253S-143-P80B5

Measures

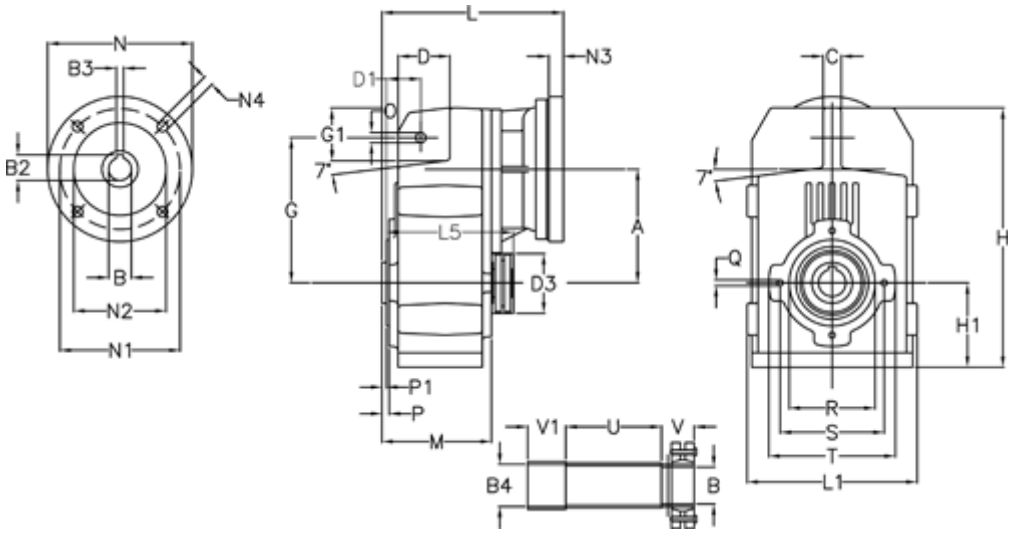

A = 128.75	D1 = 43.5	l5 = 197.5	P1 = 3.5	V1 = 40
B = 31	d3 = 83	M = 135.5	Q = M10x14	
B1 = 19	G = 162	N = 200	R = 110	
B2 = 21.8	G1 = 58.0	N1 = 165	S = 130	
B3 = 6	H = 290.5	N2 = 130	T = 150	
B4 = 32	H1 = 93.5	N4 = M10x20	Tightening torque N m = 14.5	
C = 20	L = 232.5	O = 13	U = 96.0	
D = 57.0	L1 = 188	P = 6.0	V = 38	

Product drawings and brochures of any kind may contain errors for which Brd. Klee A/S cannot be liable.